Side Panels:

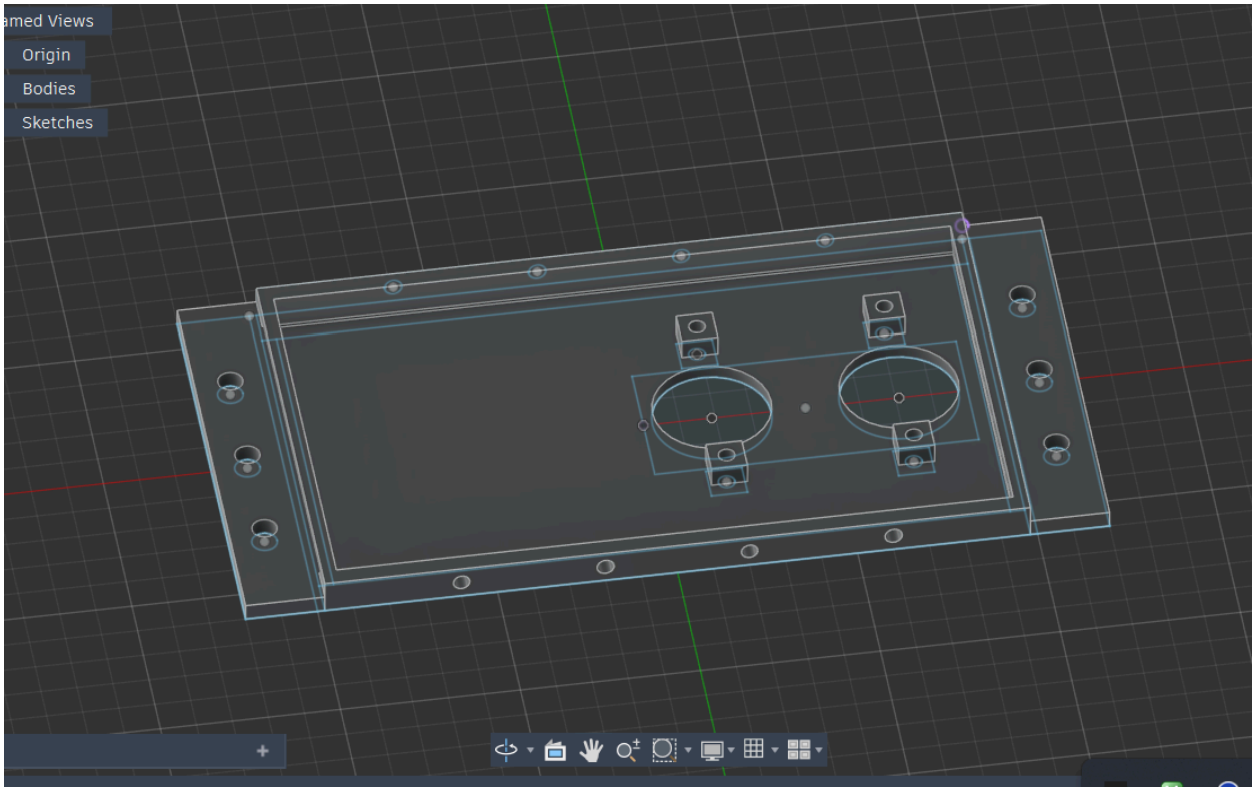

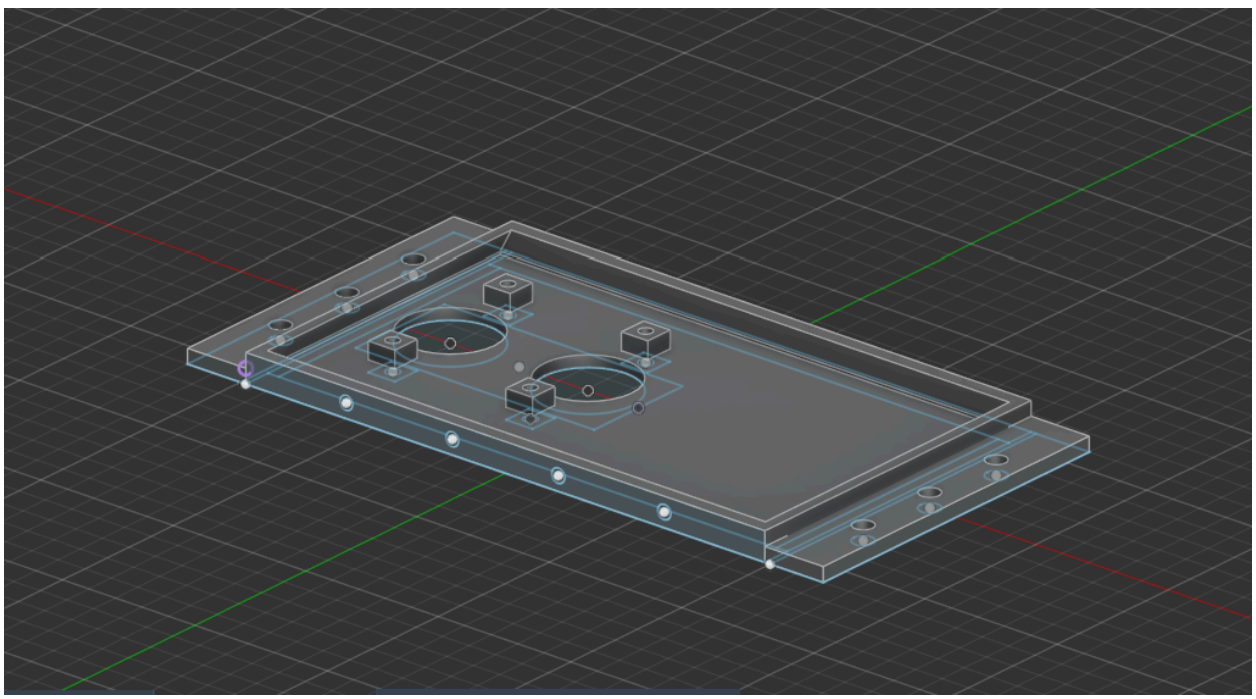

Ultimaker cura:

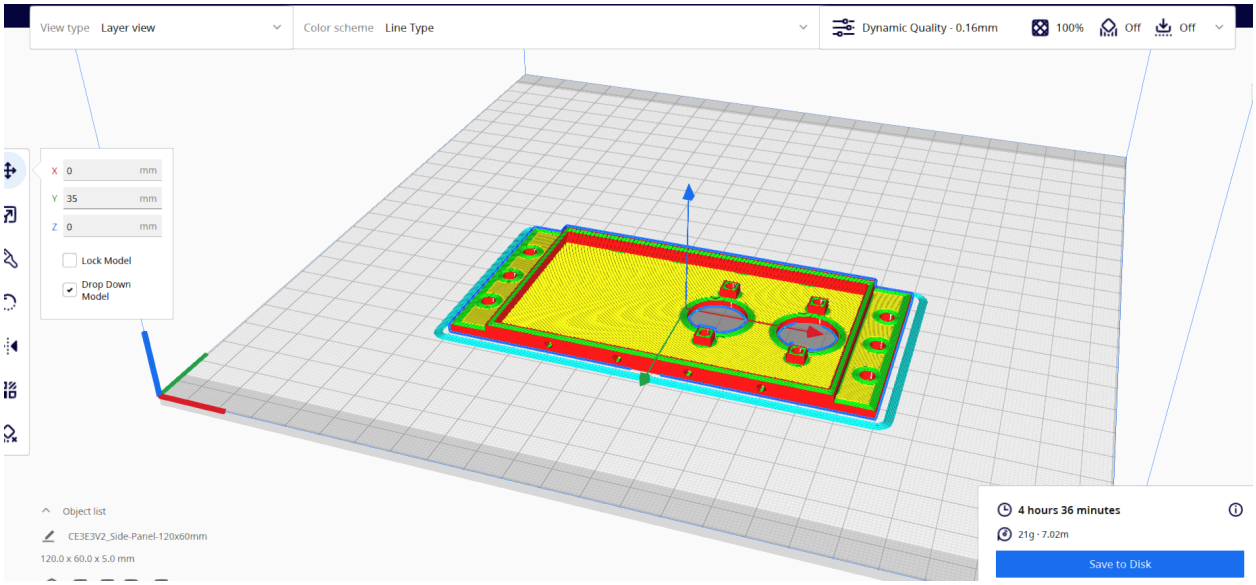

Rear Wedge:

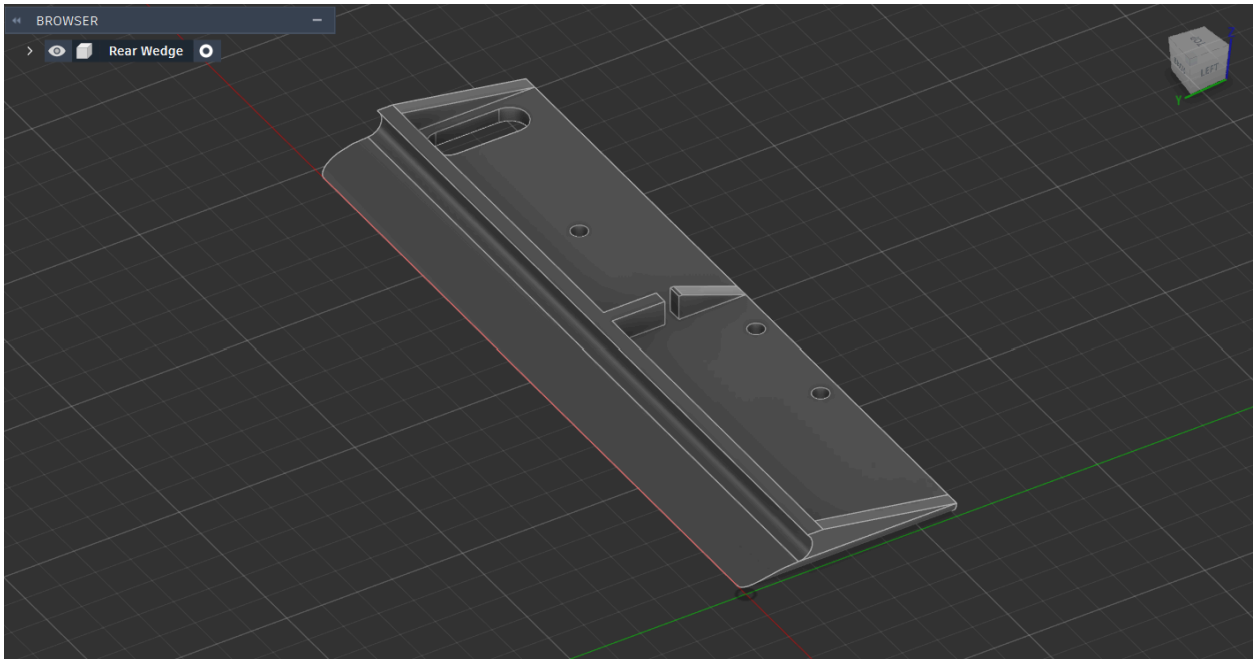

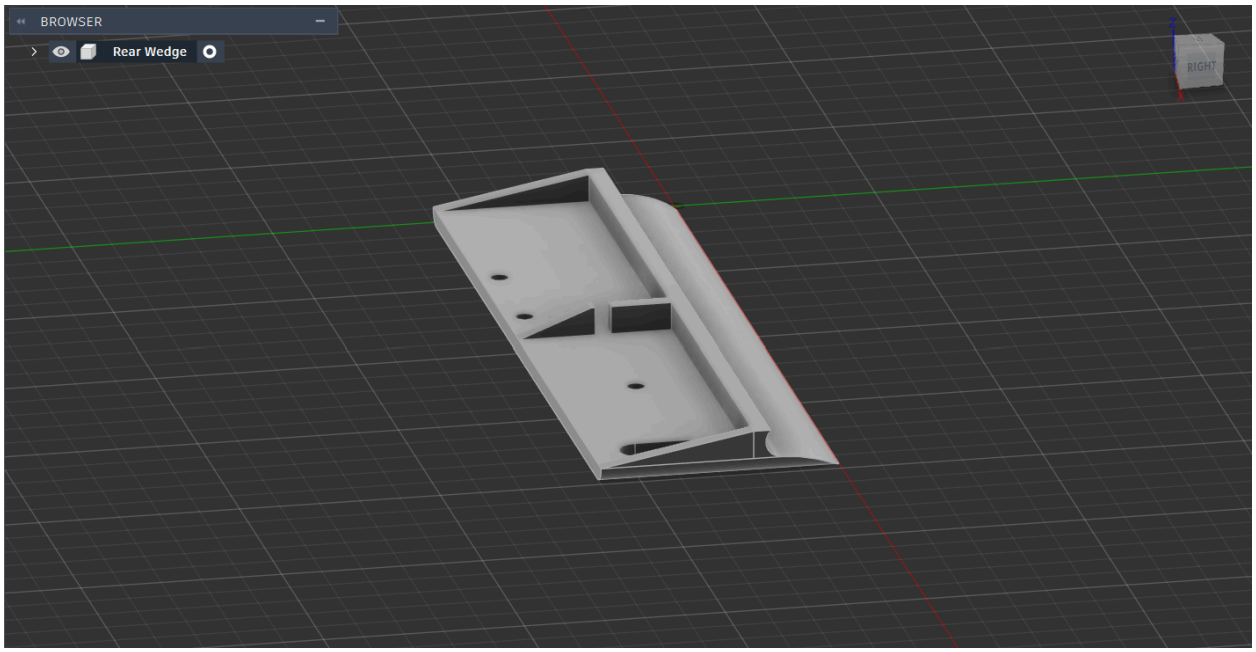

Hinge:

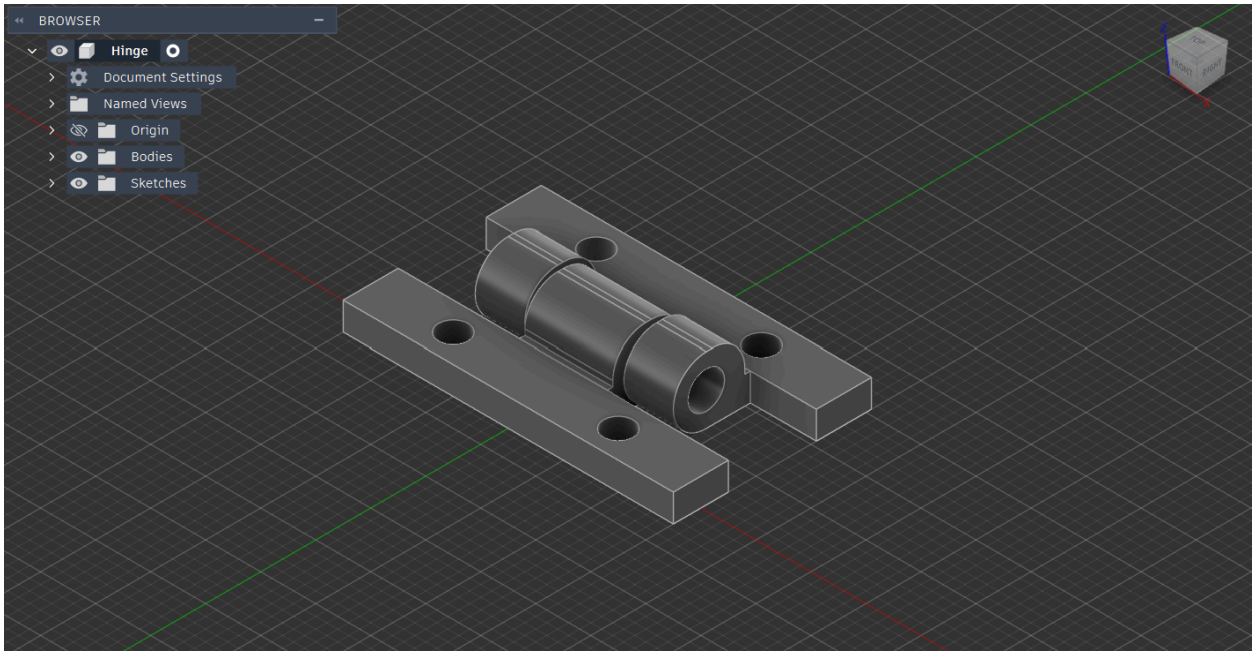
BROWSER
Hinge
Document Settings
Named Views
Origin
Bodies
Sketches